REV. NO.	DATE	DESCRIPTION	APP'D	REMARKS
1	2024.05.09	본체도장 사양변경	O.C.K	–
2	2024.12.16	회전반경 치수변경	O.C.K	–

0

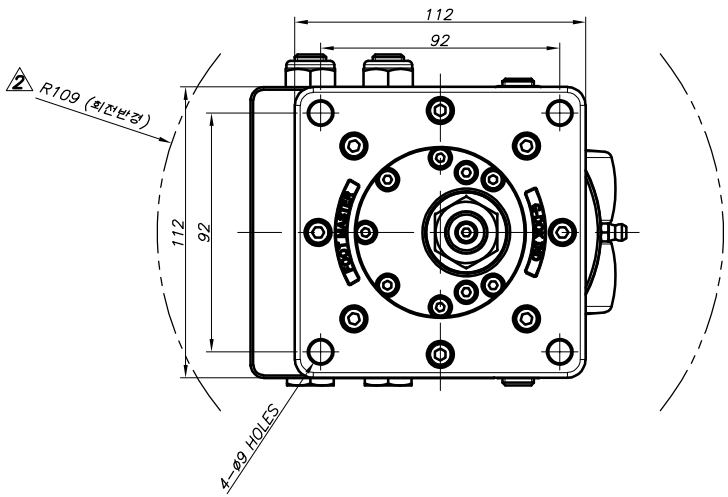

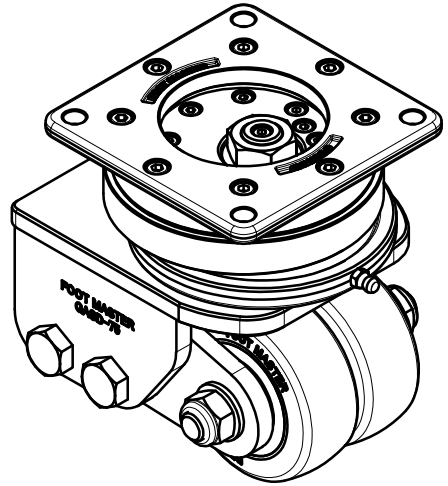

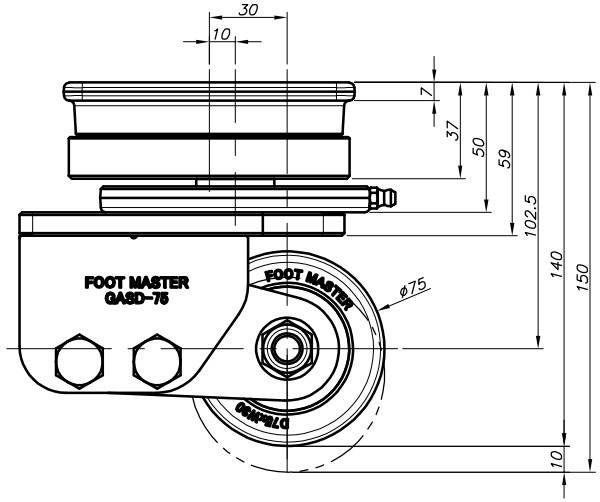

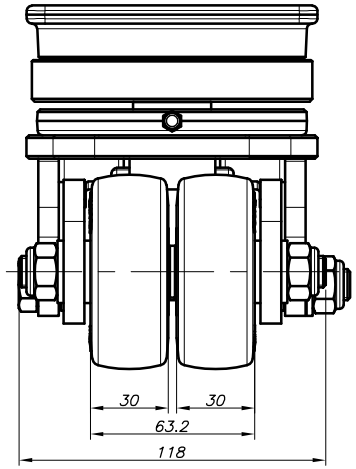

NOTE

주1) 허용하중 : 250KG/EA

PROCESS	--		
MATERIAL	--		
APPROVED BY	CHECKED BY	DRAWN BY	
O.C.K	--	J.T.H	

PRODUCT GENERAL TOLERANCE

CASTER HEIGHT		WHEEL OUTER DIAMETER		WHEEL HUB WIDTH	
PRECISION(I)	GENERAL(II)	PRECISION(I)	GENERAL(II)	PRECISION(I)	GENERAL(II)
±0.5% (MIN:±0.5mm)	±1% (MIN:±1mm)	±0.5% (MIN:±0.5mm)	±1% (MIN:±1mm)	-1% (MIN:-0.5mm)	-2% (MIN:-1mm)

GENERAL TOLERANCE

CHAMFER	0.5	ROUND	0.5	UNIT	mm

MACHINING, WORKING			DIE CASTING(S)			INJECTION MOLDING			PRESS WORKING					
RANGE	PRECISION (I)	GENERAL (II)	RANGE	PRECISION (I)	GENERAL (II)	RANGE	PRECISION (I)	GENERAL (II)	RANGE	I	II	I	II	I	II
0.5 ~ 6	±0.05	±0.1	1~3	±0.3	±0.5	1~6	±0.3	±0.5	1~3	±0.1	±0.1	±0.3	±0.5	±0.1	±0.1
6 ~ 30	±0.1	±0.2	3~6	±0.1	±0.3	6~9	±0.3	±0.5	3~10	±0.15	±0.3	±0.6	±1.5	±0.2	±0.3
30 ~ 120	±0.15	±0.3	6~10	±0.3	±0.6	9~15	±0.4	±0.8	10~18	±0.2	±0.5	±1.2	±2.5	±0.3	±0.5
120 ~ 400	±0.2	±0.5	10~18	±0.5	±0.7	15~30	±0.5	±0.8	18~30	±0.3	±0.6	±1.5	±3.0	±0.5	±0.8
400 ~ 1000	±0.3	±0.8	18~30	±0.5	±0.8	30~50	±0.5	±0.8	30~50	±0.5	±1.2	±2.0	±4.0		

NO.	DESCRIPTION	UNIT	Q'TY	MATERIAL	WEIGHT	SPECIFICATION	REMARKS

FOOT MASTER® FOOMA® G-DOK IND.

CUSTOMER	AGV CASTER	DATE	2024.12.16	GSN NO.	5H111-1111111
PRODUCT NAME	GAMS-75-ASF-HUD	SCALE	N/S	DWG. NO.	5H111-1111111
		WEIGHT	--	REVISION	2
PART NAME	ASSEMBLY	GENERAL TOLERANCE	B	SIZE	A3
				ANGLE	

FOOT MASTER G-DOK IND.

VERSION:20230808